7030-00355 KIT

MAS90: 5043-43190

7109TWR WRANGLER/HIGH SIERRA

QTY:	DESCRIPTION:
24	1/4 X 4 HEX LAG BLK
24	3/16 USS FL WASHER BLK
20	6 X 1 1/4 PHIL FLAT PARTICLE BOARD SCREW
4	1/2 X 3 FLUTED DOWEL

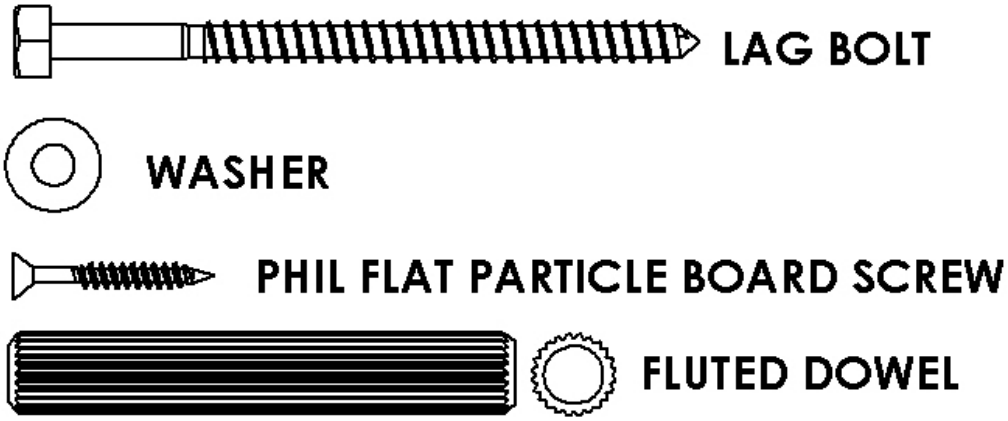

LIVING SPACES

WRANGLER

TWIN/TWIN BUNK

4710/4711

00355

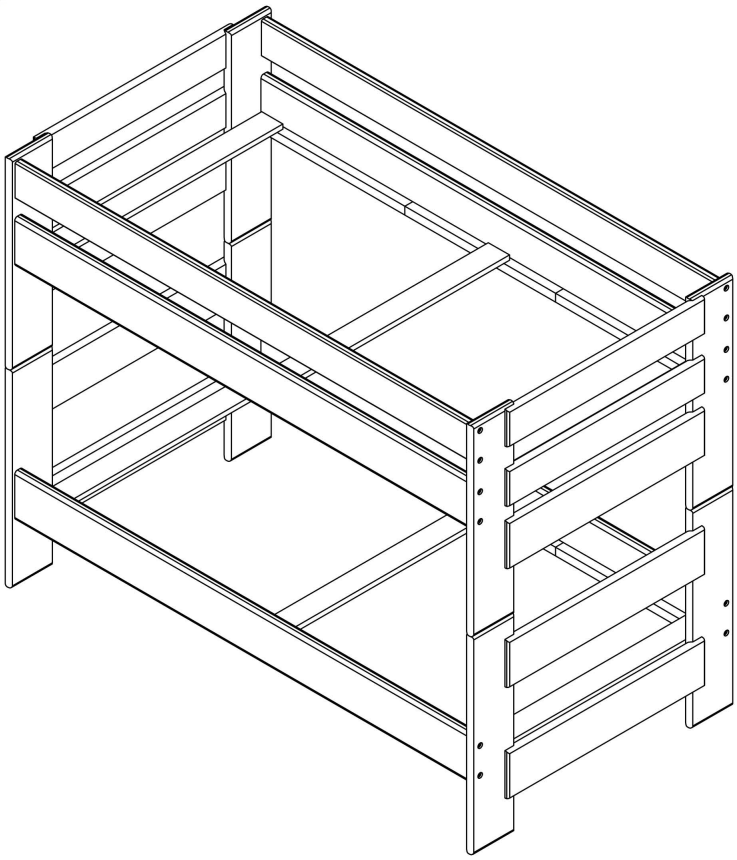

PARTS LIST:

A) 24-4 1/4" Lag Bolts
B) 24-Black Steel Washers
C) 2 -Bottom End Assemblies
D) 2 -Top End Assemblies
E) 4 -7" x 75" Mattress Rails w/Support Cleats
F) 2 -5" x 75" Guard Rails
G) 4 -1/2" x 3" Wooden Dowels
H) 6 -3 1/2" x 38 1/2" Mattress Supports
I) 20-1 1/4" Wood Screws

TOOLS REQUIRED:

1) 7/16" Wrench or Socket Wrench
2) Phillips Head Screwdriver

Recommended: Electric driver with 7/16" socket

Make sure you have all parts before beginning assembly. If you need a part, contact Living Spaces

1) Attach two mattress rails(E) to two bottom end assemblies(C) with 8 lag bolts and 8 washers, and tighten. Be sure that the holes in the posts (legs) are UP for this step!
2) Attach two mattress rails(E) and two guard rails(F) to top end assembly(D) with 16 lag bolts and 16 washers, and tighten. Be sure the holes in the posts (legs) are DOWN for this step!
3) Roll out Slat kit across bed surface stretching slats from bed end to bed end. Secure the two outermost slats on the ends with 4 wood screws, one at each corner of the bed. Center 3 individual slats in the 3 gaps built into the slat kit, and secure with 6 wood screws, one at each end of the individual slat.
4) Repeat step 3 for the other bed assembly.
5) Place four wooden dowels in the four holes in top edge of bottom bunk assembly.
6) Lift the top bunk assembly onto the bottom bunk assembly, ensuring that the dowels are inserted in holes in the top bunk assembly.
7) Add a mattress not to exceed 7" in thickness and sleep well!

A FOUNDATION IS REQUIRED WITH 3 SLAT CONFIGURATION

LIVING SPACES

00700

SAFETY WARNING

Our Bunk Beds have been tested by an Independent Laboratory and are certified to be in compliance with: ASTM F-1427, "Standard Consumer Safety Specification for Bunk Beds" and U.S. Government specifications 16 Code of Federal Regulations, parts 1213 and 1513.

SAFETY WARNINGS

1. Follow the information on the warnings attached to the upper bunk end structure and on the carton. Do not remove this label.
2. Always use the recommended size mattress or mattress support, or both, to help prevent the likelihood of entrapment or falls.
3. Surface of mattress must be at least five inches(127mm) below the upper edge of guardrails.
4. Do not allow children less than six years of age to use the upper bunk.
5. Periodically, check and ensure that the guardrail, ladder and other components are in their proper position, free from damage and that all connectors are tight.
6. Do not allow horseplay on or under the bed and prohibit jumping on the bed.
7. Prohibit more than one person on upper bunk.
8. Always use the ladder or bed end for entering and leaving the upper bunk.
9. Do not use substitute parts. Contact manufacturer or dealer for replacement parts.
10. Use of a night-light may provide added safety precautions for a child using the upper bunk.
11. If the bunk bed will be placed next to a wall, the guardrail that runs the full length of the bed should be placed against the wall to prevent entrapment between the bed and the wall. (This applies only to bunk beds without two full-length guardrails.)
12. Always use guardrails on both long sides of the upper bunk.
13. The use of water or sleep flotation mattress is prohibited.
14. Keep these instructions for future reference.

STRANGULATION HAZARD

15. Never attach or hang items to any part of the bunk bed that are not designed for use with the bed for example, but not limited to hooks, belts and jump ropes.

SIZE OF UPPER AND LOWER MATTRESS AND FOUNDATION

* A FOUNDATION IS REQUIRED WITH 3 SLAT CONFIGURATION *

Your Twin bed is designed to use a mattress 37"-39" in width and 74" - 75" in length.
Your Full bed is designed to use a mattress 52"-54" in width and 74" - 75" in length.

The total thickness of mattress and foundation (slat kit, bunk board, etc.) combined must not exceed **7**".
Note: There must be at least 5" from mattress sleeping surface to top edge of guardrail.

REPLACEMENT PARTS

Replacement parts, including additional guardrails, may be obtained from your Furniture dealer.

When used with a slat roll, the three individual slats should be placed evenly in the gaps and underneath the strapping before fastening.

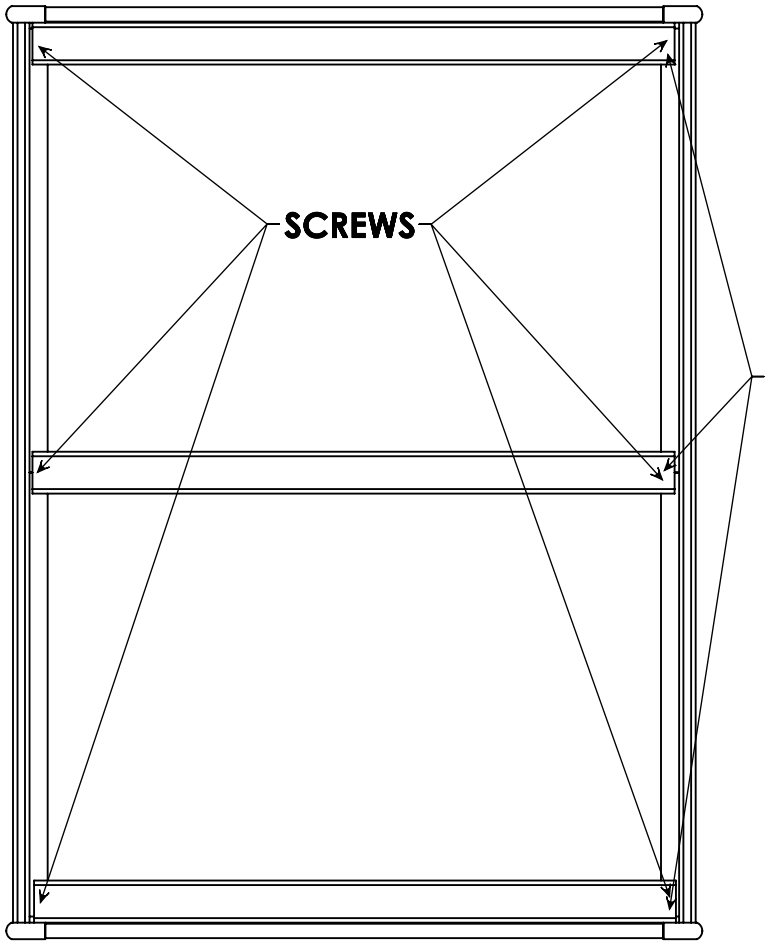

Installation of individual slats for use with Bunkie Board
(Bunkie Board sold separately)
See your retailer for purchase of Bunkie Board

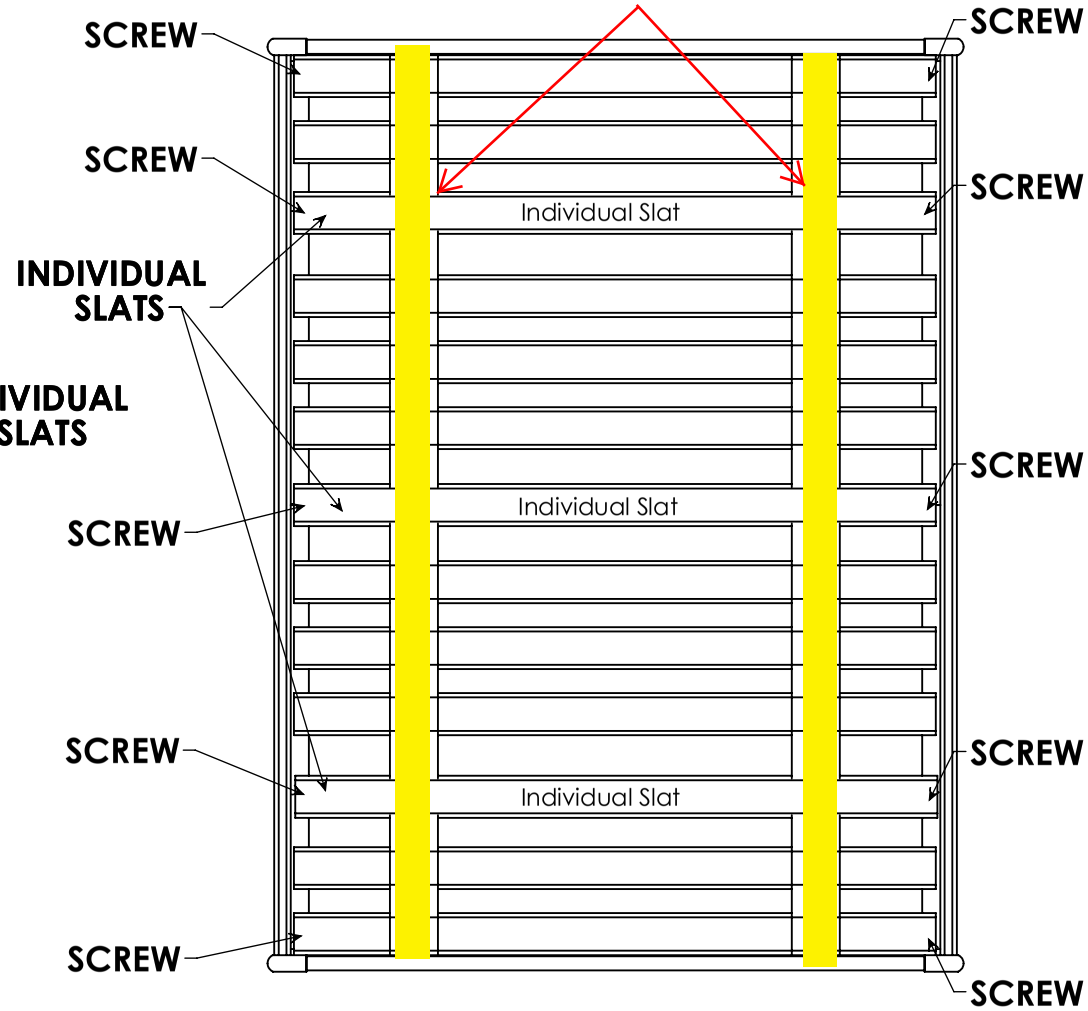

Installation of individual slats for use with Slat Roll
(Slat roll sold separately)
See your retailer for purchase of Slat Roll