7030-00205 KIT

	MAS90: 5043-43381	
	TRUNDLE BED HARDWARE	
QTY:	**DESCRIPTION:**	
4	CASTERS WITH INSERT	
4	ANTIQUE BRASS KNOBS	
4	1 1/2" SCREWS	

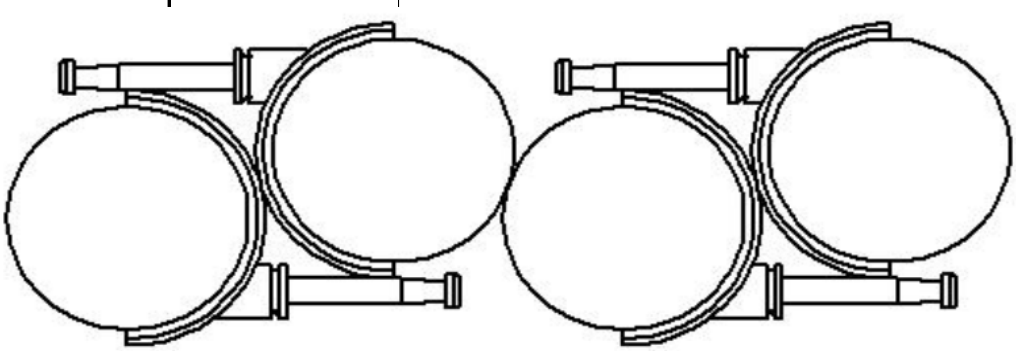

CASTER KIT

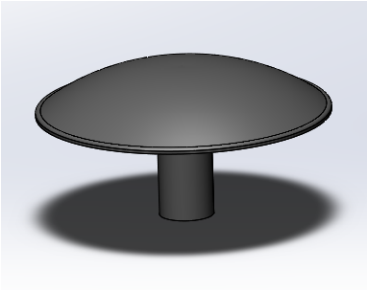

4 - Antique Brass Knobs

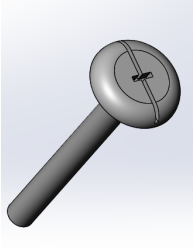

4 - 1 1/2" Screws

TRUNDLE BED

7030-00335

4466 SEDONA

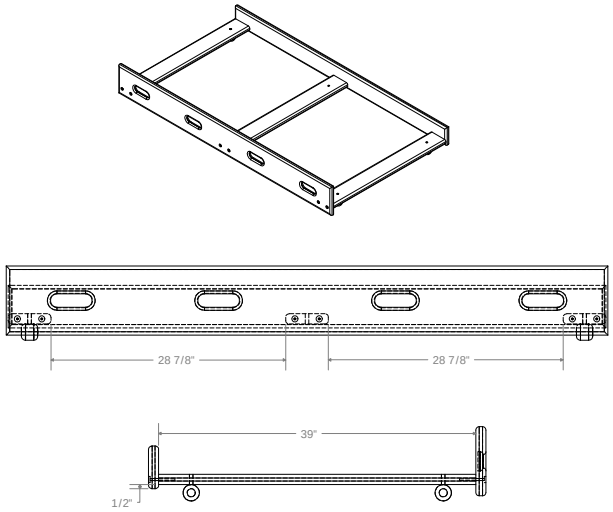

*****NOTE: CASTERS HAVE INSERTS WHICH MUST BE DRIVEN FLUSH WITH THE HOLES DRILLED, BEFORE THE CASTERS ARE INSERTED. ATTEMPTING TO DRIVE THE INSERTS IN WITH THE CASTER WHEELS MAY RESULT IN DAMAGE TO THE WHEELS**

PARTS LIST:

A) Assembled Caster Frame
B) Bunkie Mattress
C) 4 Casters w/ Metal Stem
D) 4 Black Plastic Caster Inserts

TOOLS REQUIRED:

Phillips Screwdriver

ASSEMBLY INSTRUCTIONS:

NOTE:

Make sure you have all parts before beginning assembly. If you need a part, contact the dealer where you purchased your bed.

1.) Push the 4 caster inserts into the pre-drilled holes on the bottom of the bed. Make sure the inserts sit flush with the holes and do not protrude.
Do no attempt to complete step 1 with the caster stems attached to the caster inserts

2.) Once all 4 caster inserts are in place, install the caster wheels by pushing the stems of the caster wheels into the inserts and locking them into place.

3.) Attach 4 metal knobs to trundle front with the 1 1/2" screws provided. Lay Bunkie mattress in place, and slide under bed or lower bunk.